Bidirectional Encoder Representations From Transformers (BERT)

September 6, 2024

Seoul National University

Young rae Cho

Background


Hey ELMo, what's the embedding of the word "stick"?
There are multiple possible embeddings! Use it in a sentence.
Oh, okay. Here: "Let's stick to improvisation in this skit"
Oh in that case, the embedding is: -0.02, -0.16, 0.12, -0.1 ....etc

Background

BERT uses a bidirectional Transformer (encoder)

OpenAI GPT uses a left-to-right Transformer (decoder)

ELMo uses the concatenation of independently trained Left-to-right and right-to-left LSTMs.

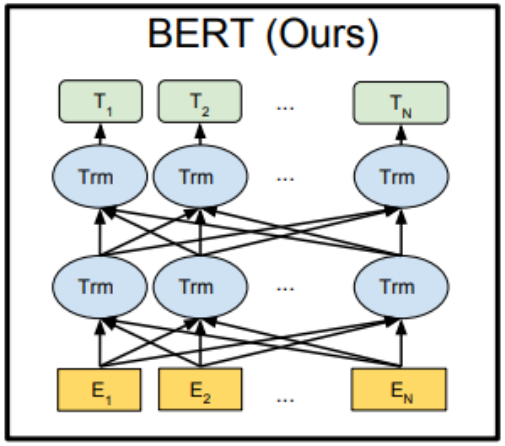

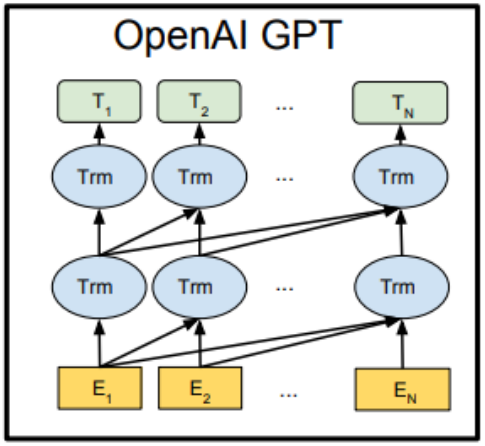

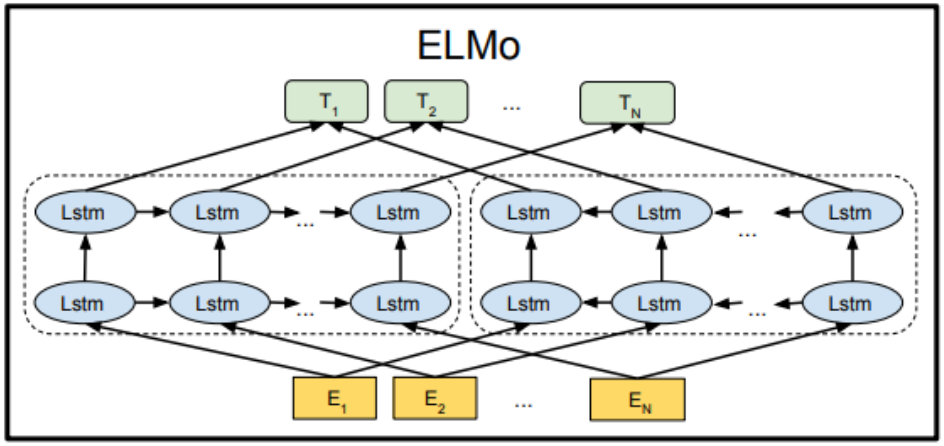

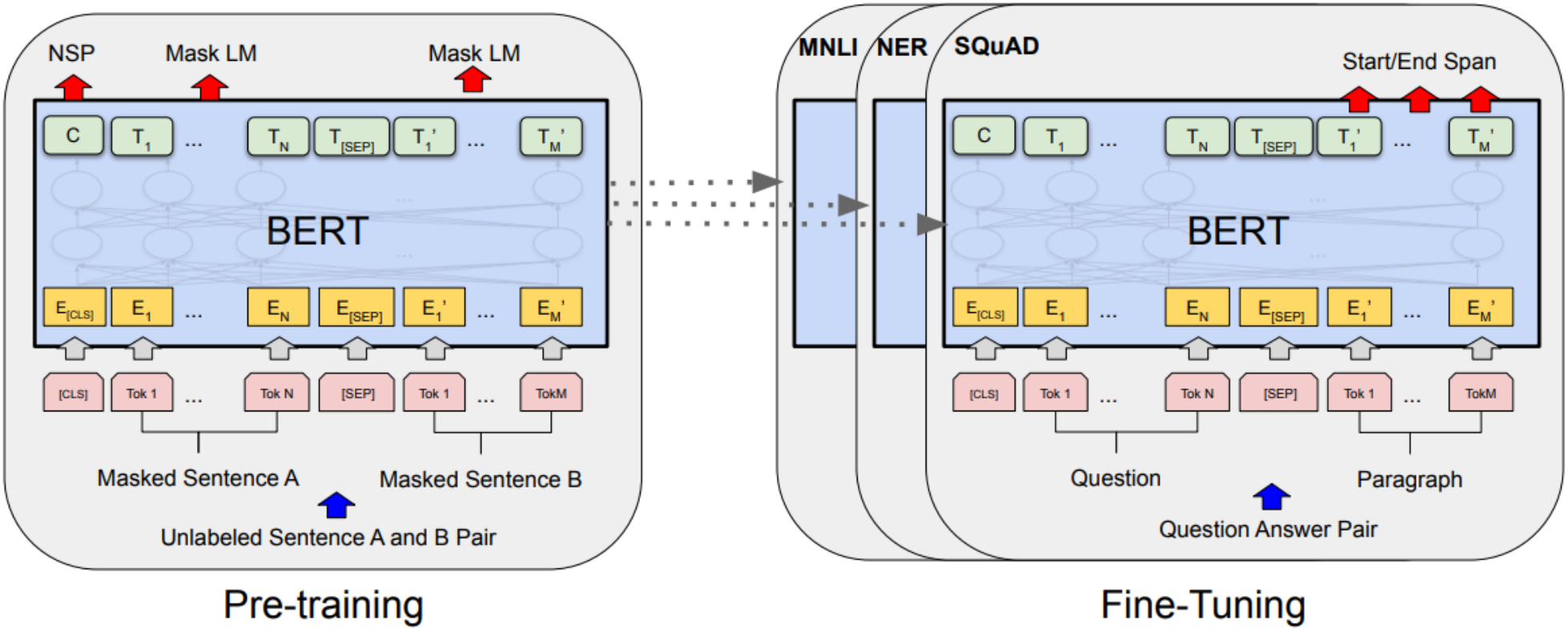
NSP
Mask LM
Mask LM
C
T1
...
TN
T[SEP]
T1'
...
TM'
BERT
E[CLS]
E1
...
EN
E[SEP]
E1'
...
EM'
[CLS]
Tok 1
...
Tok N
[SEP]
Tok 1
...
TokM
Masked Sentence A
Masked Sentence B
Unlabeled Sentence A and B Pair
Pre-training
MNLI
NER
SQuAD
Start/End Span
C
T1
...
TN
T[SEP]
T1'
...
TM'
BERT
E[CLS]
E1
...
EN
E[SEP]
E1'
...
EM'
[CLS]
Tok 1
...
Tok N
[SEP]
Tok 1
...
TokM
Question
Paragraph
Question Answer Pair
Fine-Tuning

Embedding

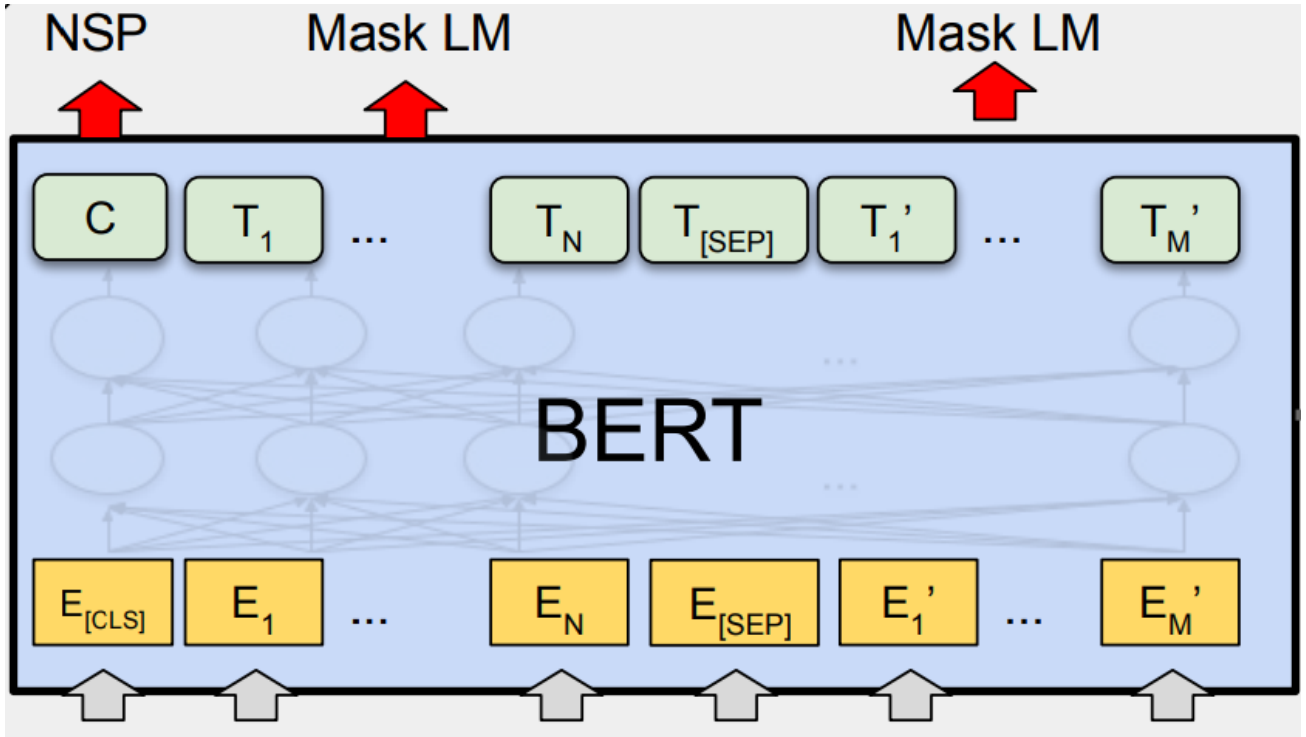
NSP
Mask LM
Mask LM
C
T1
...
TN
T[SEP]
T1'
...
TM'
BERT
E[CLS]
E1
...
EN
E[SEP]
E1'
...
EM'

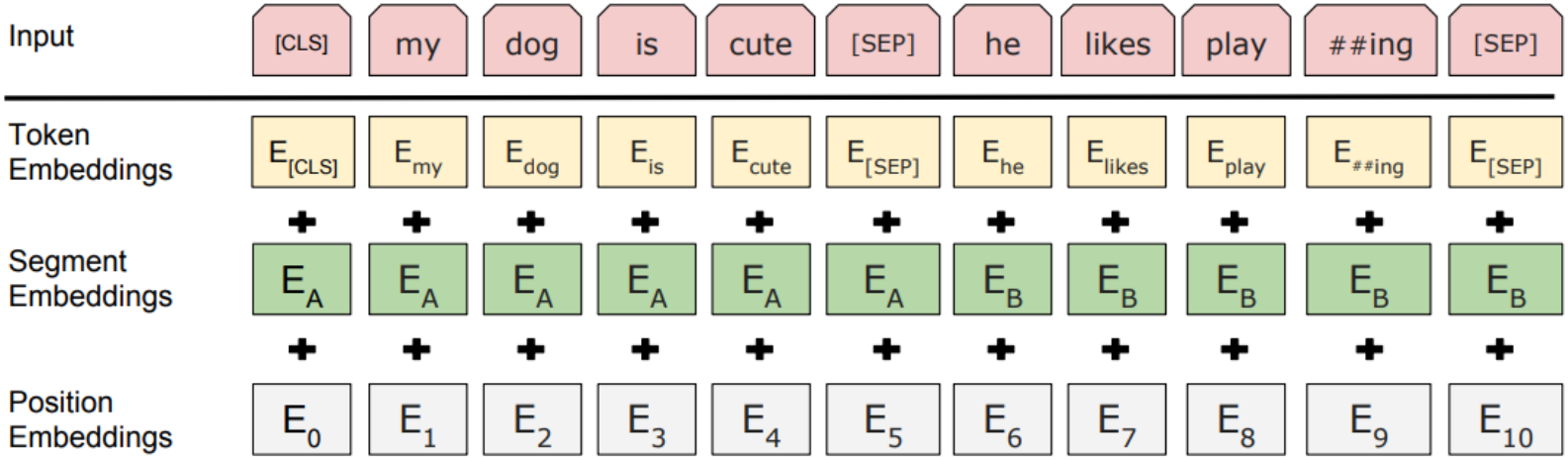
Input
[CLS] my dog is cute [SEP] he likes play ##ing [SEP]
Token Embeddings
E[CLS] Emy Edog Eis Ecute E[SEP] Ehe Elikes Eplay E##ing E[SEP]
Segment Embeddings
EA EA EA EA EA EA EB EB EB EB EB
Position Embeddings
E0 E1 E2 E3 E4 E5 E6 E7 E8 E9 E10

Task #1: Masked LM

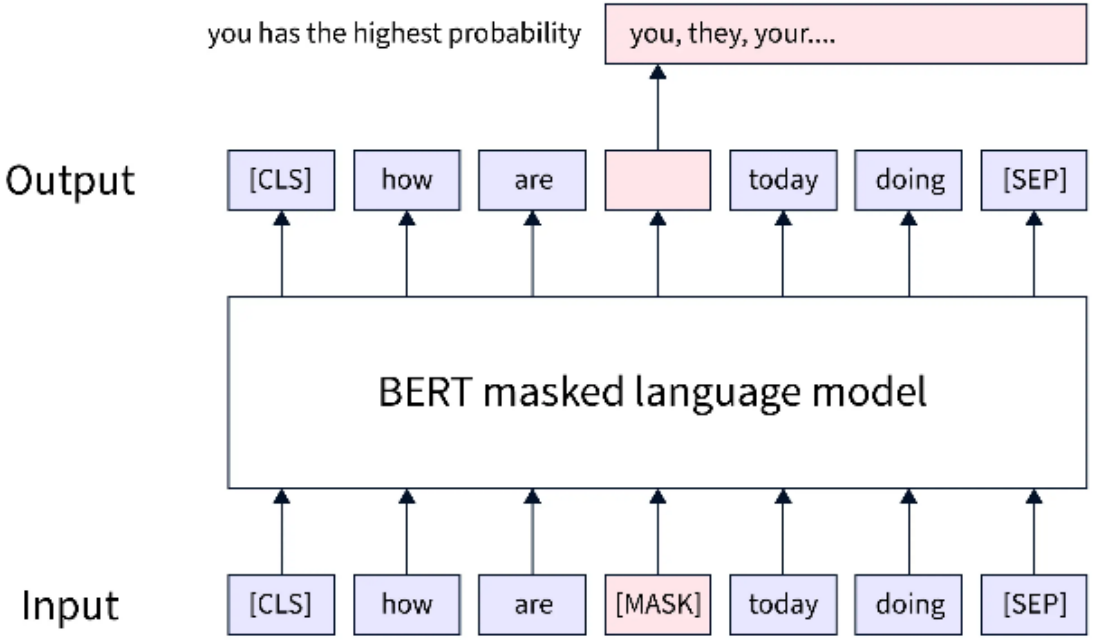

- 80% of the time: Replace the word with the `[MASK]` token, e.g., `my dog is hairy` → `my dog is [MASK]`
- 10% of the time: Replace the word with a random word, e.g., `my dog is hairy` → `my dog is apple`
- 10% of the time: Keep the word unchanged, e.g., `my dog is hairy` → `my dog is hairy`. The purpose of this is to bias the representation towards the actual observed word.

Task #2: Next Sentence Prediction (NSP)

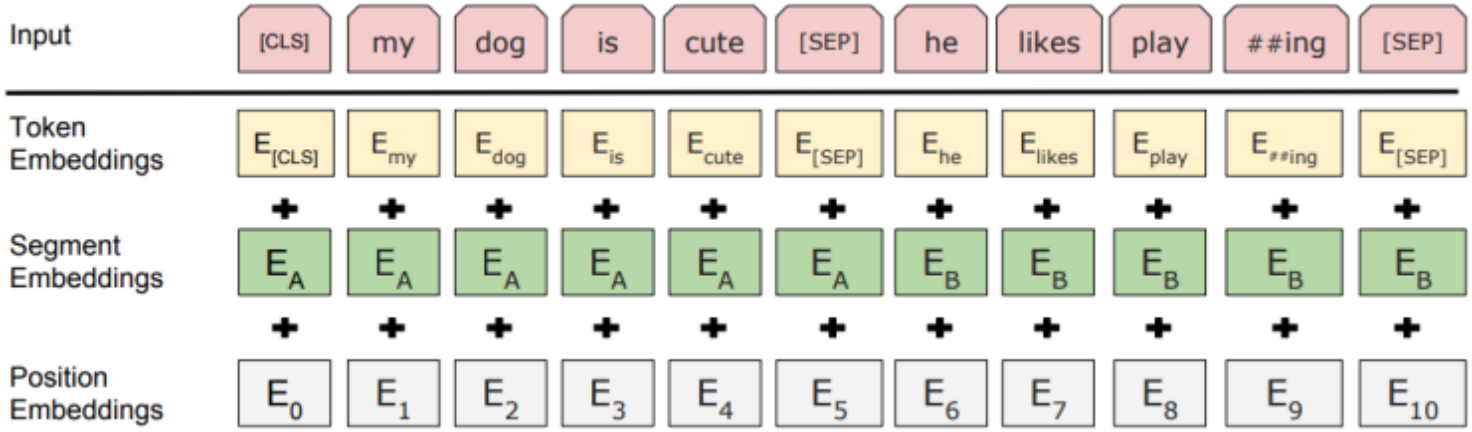

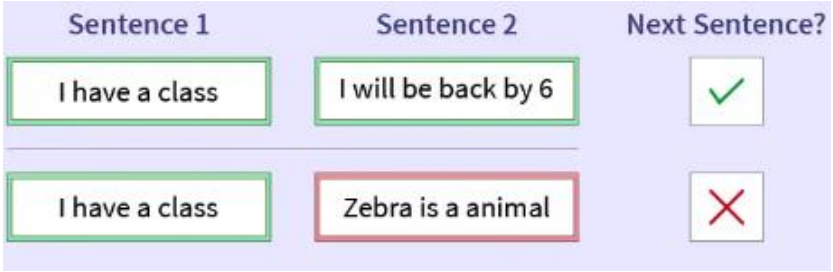

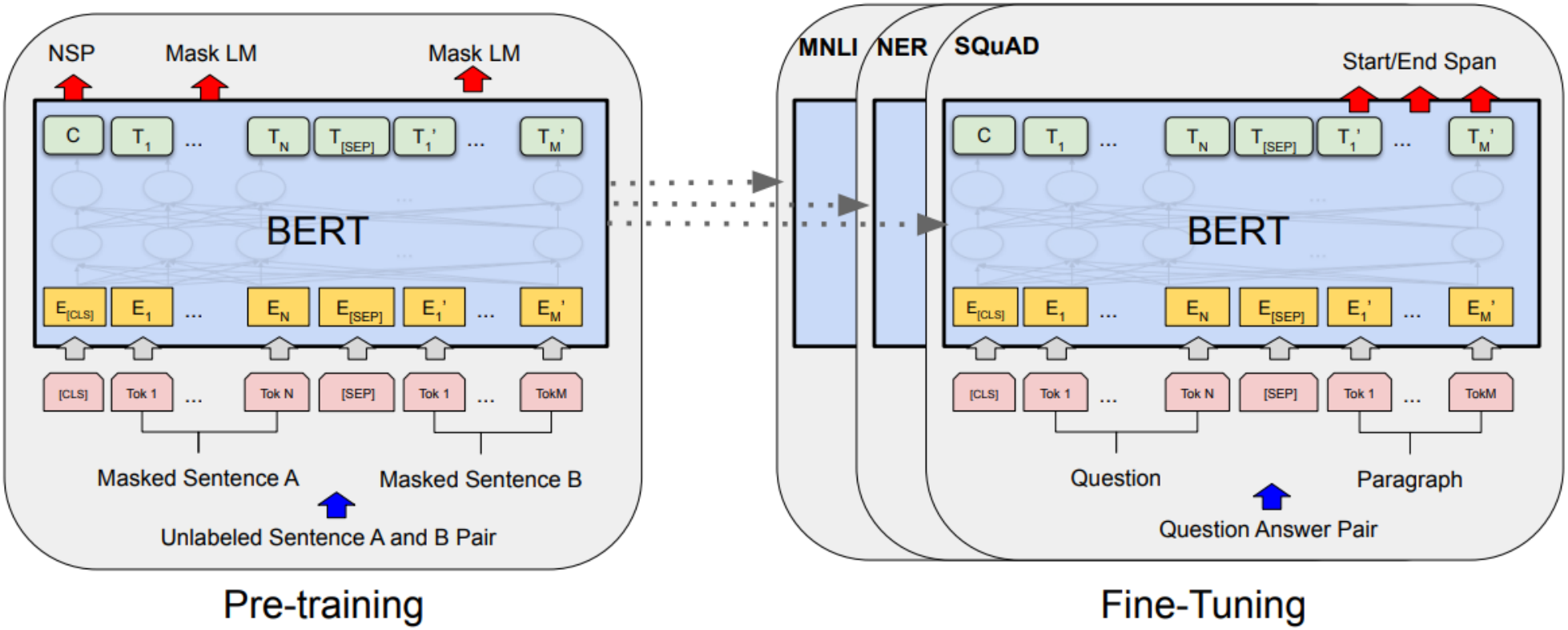
NSP
Mask LM
Mask LM
C
T1
...
TN
T[SEP]
T1'
...
TM'
BERT
E[CLS]
E1
...
EN
E[SEP]
E1'
...
EM'
[CLS]
Tok 1
...
Tok N
[SEP]
Tok 1
...
TokM
Masked Sentence A
Masked Sentence B
Unlabeled Sentence A and B Pair
Pre-training
MNLI
NER
SQuAD
Start/End Span
C
T1
...
TN
T[SEP]
T1'
...
TM'
BERT
E[CLS]
E1
...
EN
E[SEP]
E1'
...
EM'
[CLS]
Tok 1
...
Tok N
[SEP]
Tok 1
...
TokM
Question
Paragraph
Question Answer Pair
Fine-Tuning

Fine-Tuning exemples

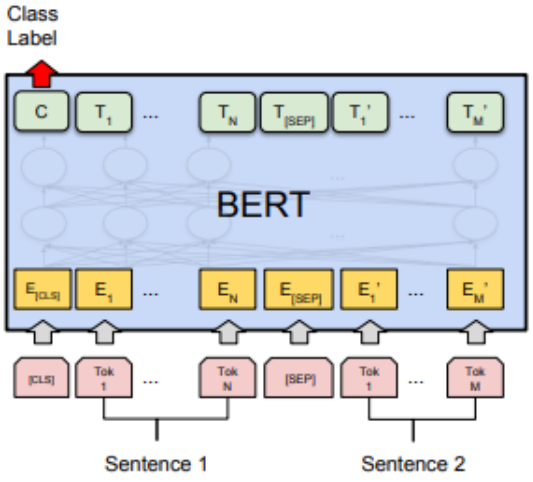

(a) Sentence Pair Classification Tasks: MNLI, QQP, QNLI, STS-B, MRPC, RTE, SWAG

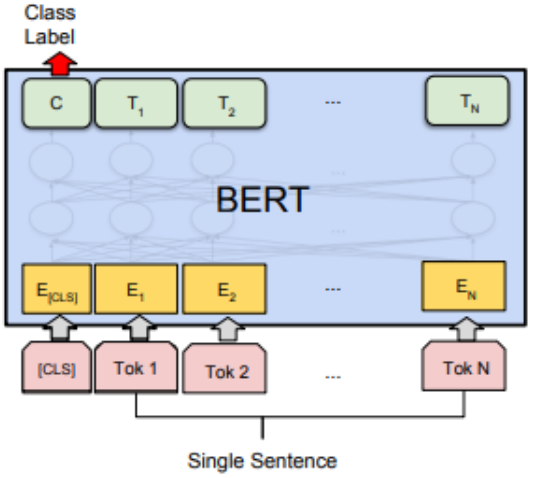

(b) Single Sentence Classification Tasks: SST-2, CoLA

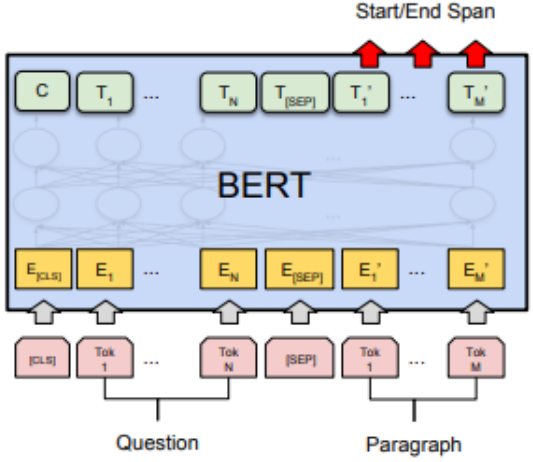

(c) Question Answering Tasks: SQuAD v1.1

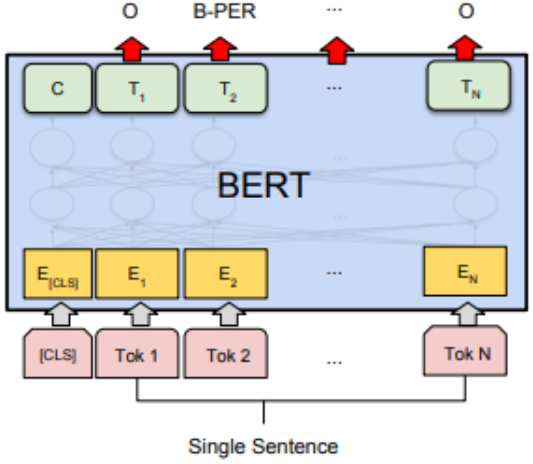

(d) Single Sentence Tagging Tasks: CoNLL-2003 NER

Ablation studies

Effect of Pre-training Tasks

Tasks	Dev Set MNLI-m (Acc)	QNLI (Acc)	MRPC (Acc)	SST-2 (Acc)	SQuAD (F1)
$\text{BERT}_{\text{BASE}}$	84.4	88.4	86.7	92.7	88.5
No NSP	83.9	84.9	86.5	92.6	87.9
LTR & No NSP	82.1	84.3	77.5	92.1	77.8
+ BiLSTM	82.1	84.1	75.7	91.6	84.9

Table 5: Ablation over the pre-training tasks using the $\text{BERT}_{\text{BASE}}$ architecture. "No NSP" is trained without the next sentence prediction task. "LTR & No NSP" is trained as a left-to-right LM without the next sentence prediction, like OpenAI GPT. "+ BiLSTM" adds a randomly initialized BiLSTM on top of the "LTR + No NSP" model during fine-tuning.

Effect of Model Size

	Hyperparams				Dev Set Accuracy		
	#L	#H	#A	LM (ppl)	MNLI-m	MRPC	SST-2
	3	768	12	5.84	77.9	79.8	88.4
	6	768	3	5.24	80.6	82.2	90.7
	6	768	12	4.68	81.9	84.8	91.3
Base	12	768	12	3.99	84.4	86.7	92.9
	12	1024	16	3.54	85.7	86.9	93.3
Large	24	1024	16	3.23	86.6	87.8	93.7

Table 6: Ablation over BERT model size. #L = the number of layers; #H = hidden size; #A = number of attention heads. "LM (ppl)" is the masked LM perplexity of held-out training data.

BERT vs GPT

BERT	GPT
Only Encoder	Only Decoder
Bidirectional LM	Left to Right LM
Fine - tunning	No Fine - tunning

Conclusion

Pre-training and Fine tuning model

Bidirectional model

State-of-the-art (SOTA)